Li Time | Lithium Precision Industry-Specific Expertise

12.8V 100Ah ComFlex Smart

LiFePO4 Battery

Part Number: L12V100-100-COM-BT-4-A100



Basic Specification

Nominal Voltage	12.8V
Nominal Capacity	100Ah
Nominal Energy	1280Wh
Intemal Resistance	≤40mΩ
Function	Bluetooth & Victron Communication
Max. Continuous Output Power	1280W
BMS Board	100A
Max. Batteries in Series and Parallel	Communication scenario: 16P1S Non-communication scenario: 4P4S
System Max. Extended Power	20.48kW
System Max. Extended Energy	20.48kWh

Mechanical Specification

Dimension(L *W * H)	L13*W6.77*H8.5 in 330*172*216 mm
Weight	Approx. 21.6 lbs/ 9.81 kg
Terminal Type	M8*14mm
Terminal Torque	13±1 N·m
Case Material	ABS
IP Rating	IP65
Cell Type-chemistry	$LiFePO_4$
BCI	Group31

Charge Specification

Max. Continuous Charging Current	100A
Recommended Charging Current	20A
Recommended Charging Voltage	14.4±0.2V

Safety Specification

Certifications	FCC ID,UL-1973,CE,RoHS,UN38.3,MIC
Protection	Over-temperature/Over-discharge/Over-current/Over-voltage/Short-circuit

Discharge Specification

Max. Continuous Discharging Current	100A
Peak Discharging Current	500A/s

Environment Specification

Storage Temperature Range	-10°C - 50°C (14°F - 122°F)
Recommended Storage Temperature	10°C - 35°C (50°F - 95°F)
Charging Temperature Range	0°C - 50°C (32°F - 122°F)
Discharging Temperature Range	-20°C - 60°C (-4°F - 140°F)

Dimensions

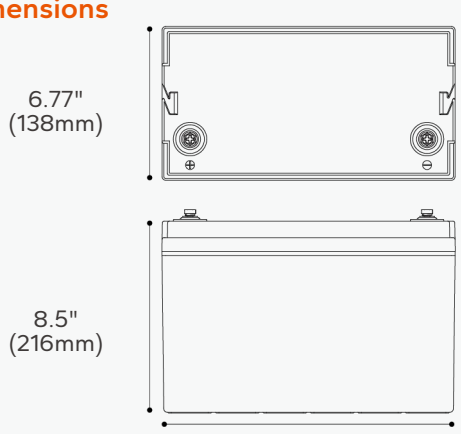

www.litimesolutions.com
sales@litimesolutions.com
+1(888) 311-1866
Longgang District, Shenzhen, China

Li Time | Lithium Precision Industry-Specific Expertise

Performance Curves

Discharge Performance at 25°C

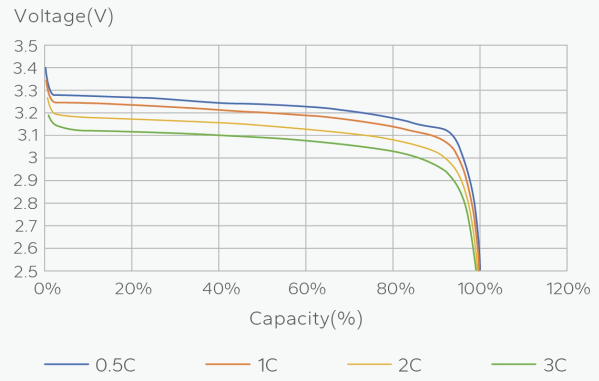

Charge and Discharge at 25°C, 0.5C

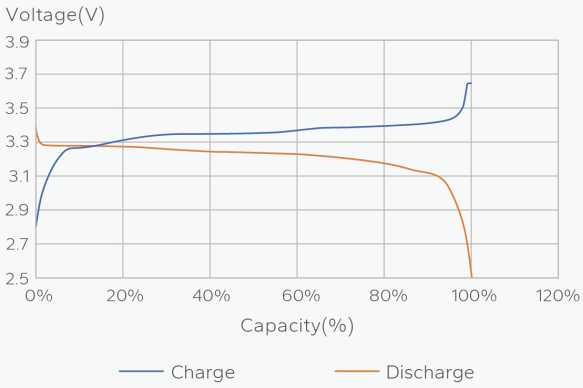

Discharge Curves at Different Temperature

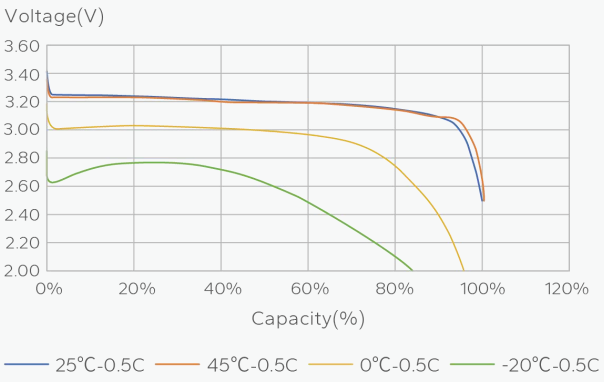

Cycle Life with DOD at 25°C

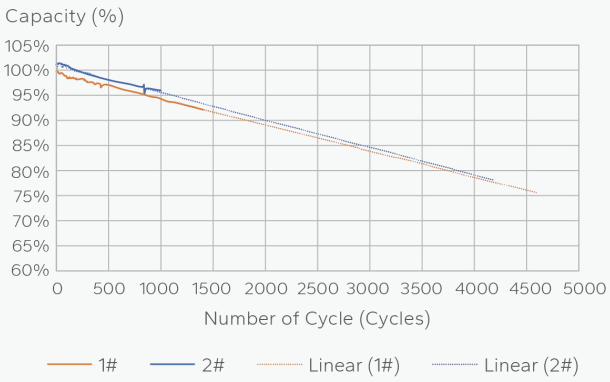

How to Estimate the Battery Capacity

The battery capacity could be roughly estimated by its **resting voltage** (not charging/discharging voltage). Since the voltage of each battery is slightly different, and the voltage measurement is affected by the measuring instrument, ambient temperature, etc., the following parameters are for reference only.

Resting Voltage: The voltage is measured after the battery has been disconnected from the charger and loads with zero current, and left alone for 30 minutes.

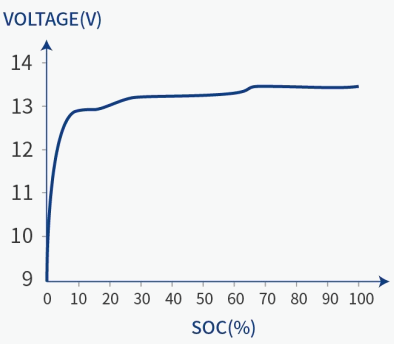

SOC (%)	VOLTAGE (V)
0	10 to 12
25	13 to 13.15
50	13.15 to 13.2
75	13.3 to 13.33
100	≥13.33

① Based on the characteristics of LiFePO4 batteries, the voltage measured by all LiFePO4 batteries during charging/discharging is not the real voltage of the battery. Therefore, after charging/discharging and disconnecting the battery from the power source, the voltage of the battery will gradually drop/increase to its real voltage.

www.litimesolutions.com
sales@litimesolutions.com
+1(888) 311-1866
Longgang District, Shenzhen, China